NHS
Yorkshire and the Humber

Making Every Contact Count

MECC

© Copyright NHS Yorkshire and Humber 2011

NHS
Yorkshire and the Humber

Section 1

WHAT IS MECC?

NHS
Yorkshire and the Humber

Making Every Contact Count?

A region wide programme to ensure the workforces serving individuals and communities are competent and confident to make the most of opportunities to improve population health and wellbeing needs.

This approach will reduce system-wide costs.

The Intent

Making Every Contact Count (MECC) puts the prevention, protection, and promotion of health and wellbeing at the heart of every contact.

The aim is to use each contact with a person to offer appropriate advice, interventions and/or referral to optimise health and wellbeing.

The Business Case

The Wanless Review said that to save £30bn of public expenditure by 2022/23, individuals needed to be “fully engaged” in their own health and healthcare.

Source: Securing Good Health for the Whole Population: Population Health Trends Wanless 2003

NICE Guidance

NICE guidance explained that there are certain common episodes in most people's lives that provide opportunities for significant behaviour and lifestyle change. Whilst all life-courses are different, there are numerous opportunities to help people improve health and wellbeing.

NHS
Yorkshire and the Humber

Section 2

WIDER HEALTH DETERMINANTS

NHS
Yorkshire and the Humber

Wider Health Determinants

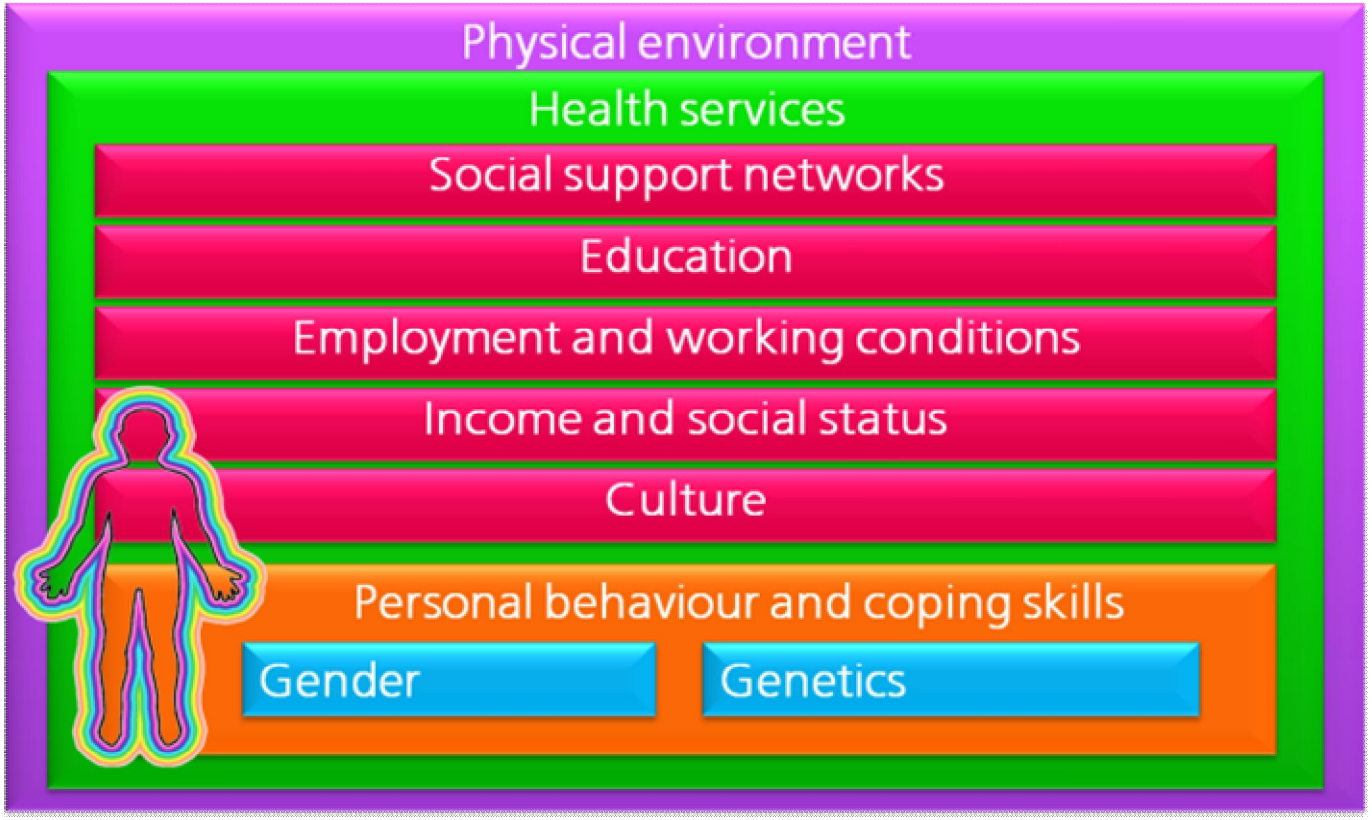

Source: WHO: The determinants of health
http://www.who.int/hia/evidence/doh/en/

Marmot Review Key Themes

- Reducing health inequalities is a matter of fairness and social justice – inequality is avoidable
- Action is needed to tackle the social gradient in health – Proportionate universalism
- Action on health inequalities requires action across all the social determinants of health
- Reducing health inequalities is vital for the economy – cost of inaction
- A move beyond economic growth to well-being of society: sustainability and the fair distribution of health

NHS
Yorkshire and the Humber

Section 3

BEHAVIOUR CHANGE

MECC Behaviour Change Approach

- Accounts for the potential for the wider public service workforce to encourage behaviour change through
  - Brief Advice and Signposting
  - Behaviour Change Intervention
  - Programmes of Behaviour Change Interventions
- Note: Interventions can include a range of actions covered in the taxonomy of behaviour change or combinations of those actions

NHS
Yorkshire and the Humber

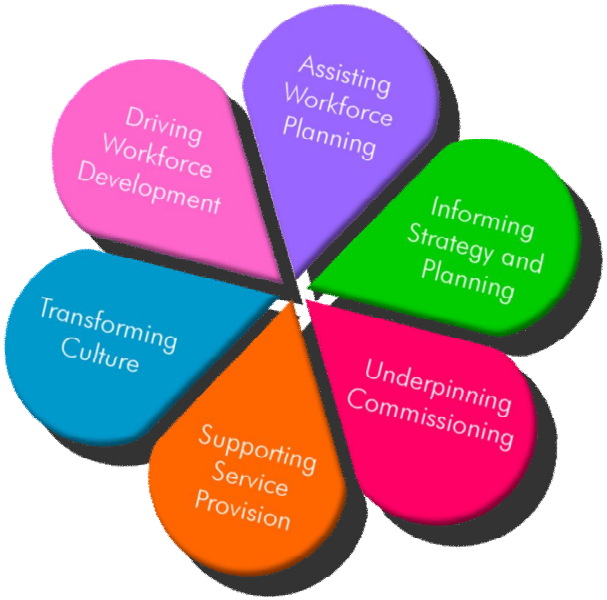

Section 4

A COMPETENCE FRAMEWORK

NICE Recommendation

Training and Education for Behaviour Change:

"Relevant national organisations should consider developing standards for these skills"

Source: 'Behaviour change at population, community and individual levels' NICE October 2007

Making Every Contact Count

NHS
Yorkshire and the Humber

Prevention and Lifestyle Behaviour Change: A Competence Framework

NHS
Yorkshire and the Humber

Principles of the MECC Approach

The Context

- Evidence based
- Come from where the individual is….
- People have multiple and complex lifestyle issues
- Primary and secondary prevention

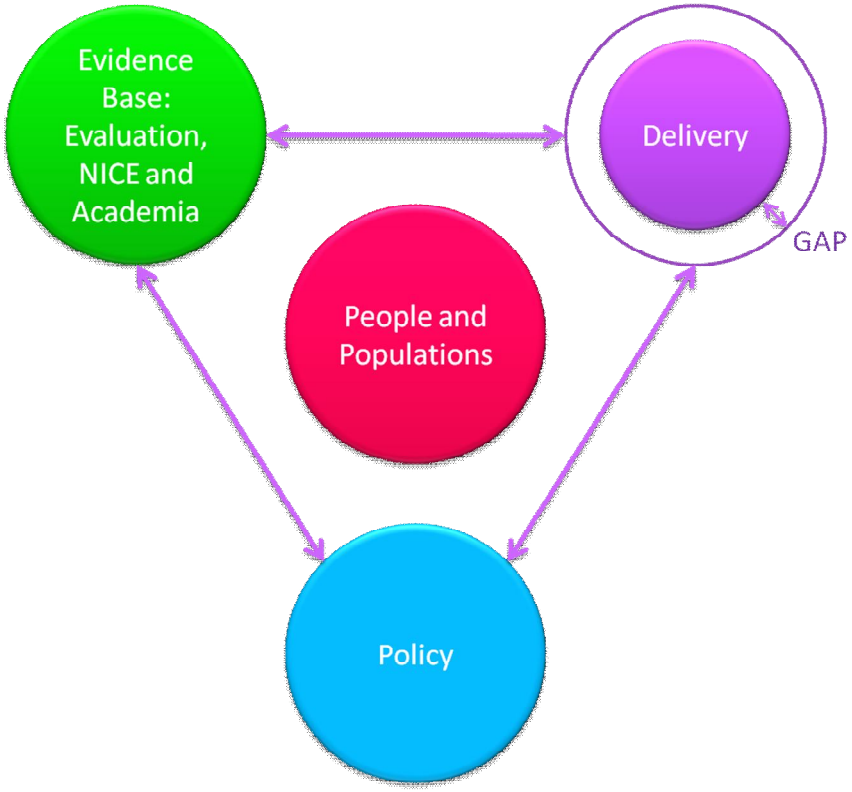

Principles of the MECC Approach

Application

- Provide minimum specifications
- Non-hierarchical
- Generic and expert
- Keep it simple
- Outcome focused

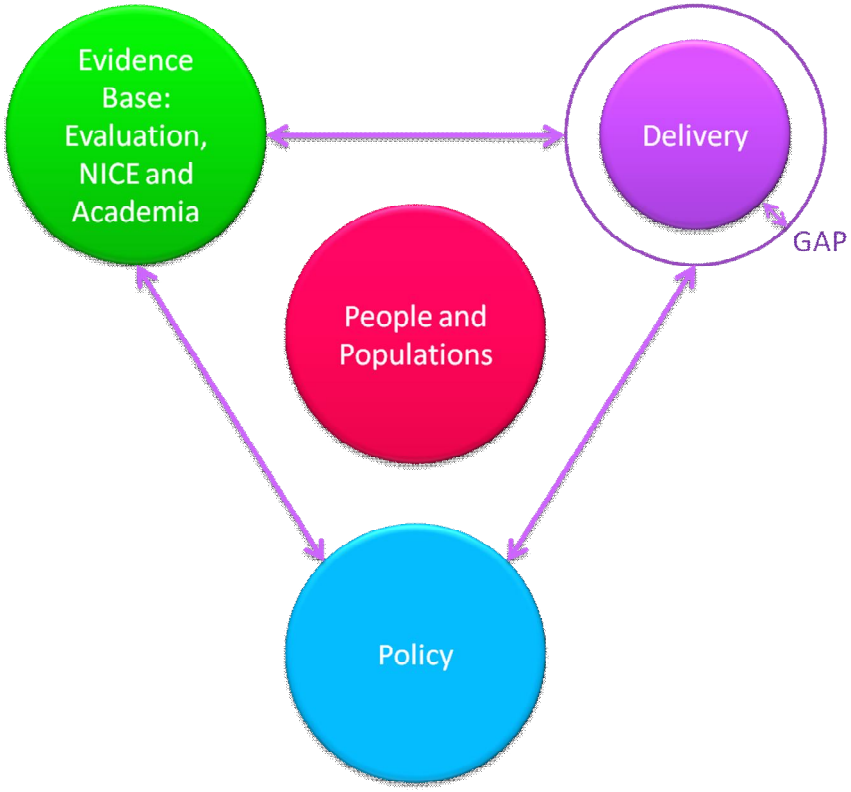

Making Every Contact Count

NHS
Yorkshire and the Humber

Level 1

- The worker is able to engage with individuals and use basic skills of awareness, engagement, and communication to **introduce** the idea of lifestyle behaviour change and to **motivate** the individual to consider/think about making changes to their lifestyle behaviours.

Level 2

- The worker is able to select and use brief lifestyle behaviour change techniques that help individuals **take action** about their lifestyle behaviour choices which may include starting, stopping, increasing or decreasing lifestyle behaviour activities

Level 3

- The worker is able to select and use appropriate techniques and approaches to provide support to individuals as they **change** their lifestyle behaviours and facilitate the individual to **maintain these changes** over the longer term.

Level 1 Competences

1.1 Ensure individuals are able to make informed choices to manage their self care needs

1.2 Support and enable individuals to access appropriate information to manage their self care needs

1.3 Communicate with individuals about promoting their health and wellbeing

1.4 Provide opportunistic brief advice

Level 2 Competences

2.1: Ensure your own actions support the care, protection and wellbeing of individuals

2.2: Select and implement appropriate brief lifestyle behaviour change techniques with individuals

2.3: Enable individuals to change their behaviour to improve their own health and wellbeing

2.4: Undertake brief interventions

Level 3 Competences

3.1: Enable people to address issues related to health and wellbeing

3.2: Enable individuals to put their choices for optimising their lifestyle behaviours into action

3.3: Enable individuals to maintain lifestyle behaviour changes

Level 4

The worker uses specialist/advanced or lifestyle and behaviour specific behaviour change approaches to support individuals. Workers at this level will also act as a resource for the support, training and education of others.

NHS
Yorkshire and the Humber

The Framework Applied

The Health Bill

Access = “every contact”

Outcomes = “make it count”

The argument...

Making Every Contact Count is potentially one of the most straightforward ways of organising the efforts of society

because

the ability to achieve it (should be) in our direct control

It's Gone 'Viral'

- Universally well-received and taken up by a wide range of organisations in Y&H boundaries and beyond:

  - ✓ Voluntary/3rd sector (AGE UK, Groundwork)
  - ✓ Hospitals - (A&E, Respiratory wards, Cardiac Rehab)
  - ✓ PCTs - e.g., Cornwall, Blackburn & Darwen
  - ✓ Mental health
  - ✓ Fire and Rescue services
  - ✓ Community pharmacies
  - ✓ Private health clubs
  - ✓ Local authorities (Adult Social Care; Teaching Assistants)
  - ✓ Connexions
  - ✓ Social housing provider
  - ✓ And more…

Tools to Support MECC

- Making Every Contact Count Assessment Tool (MECCAT)
- Resource Pack
- Reports:
  - Economic Case
  - Social Care Scoping
  - Academic Review
  - Initial Evaluation
  - Mapping to Public Health Outcomes Framework

Making Every Contact Count

NHS
Yorkshire and the Humber

NHS
Leeds

Leeds let's change!

Training Workshops Overview

Lifestyle Behaviour Change Competence Framework

3 levels of training:

- **Level 1 – 30 sec intervention**
- **Level 2 – 10-30min intervention**
- **Level 3 – multi session intervention**

Influencing client behaviour

Better Health through Education

hdm-medical

leeds let's change

www.leedsletschange.co.uk

The components of LLC

leeds let's change

- Working with key Organisations
- Referring people to Healthy Living services and community activities
- Training "making every contact count"
- Marketing
- Monitoring and Evaluation

leeds let's change

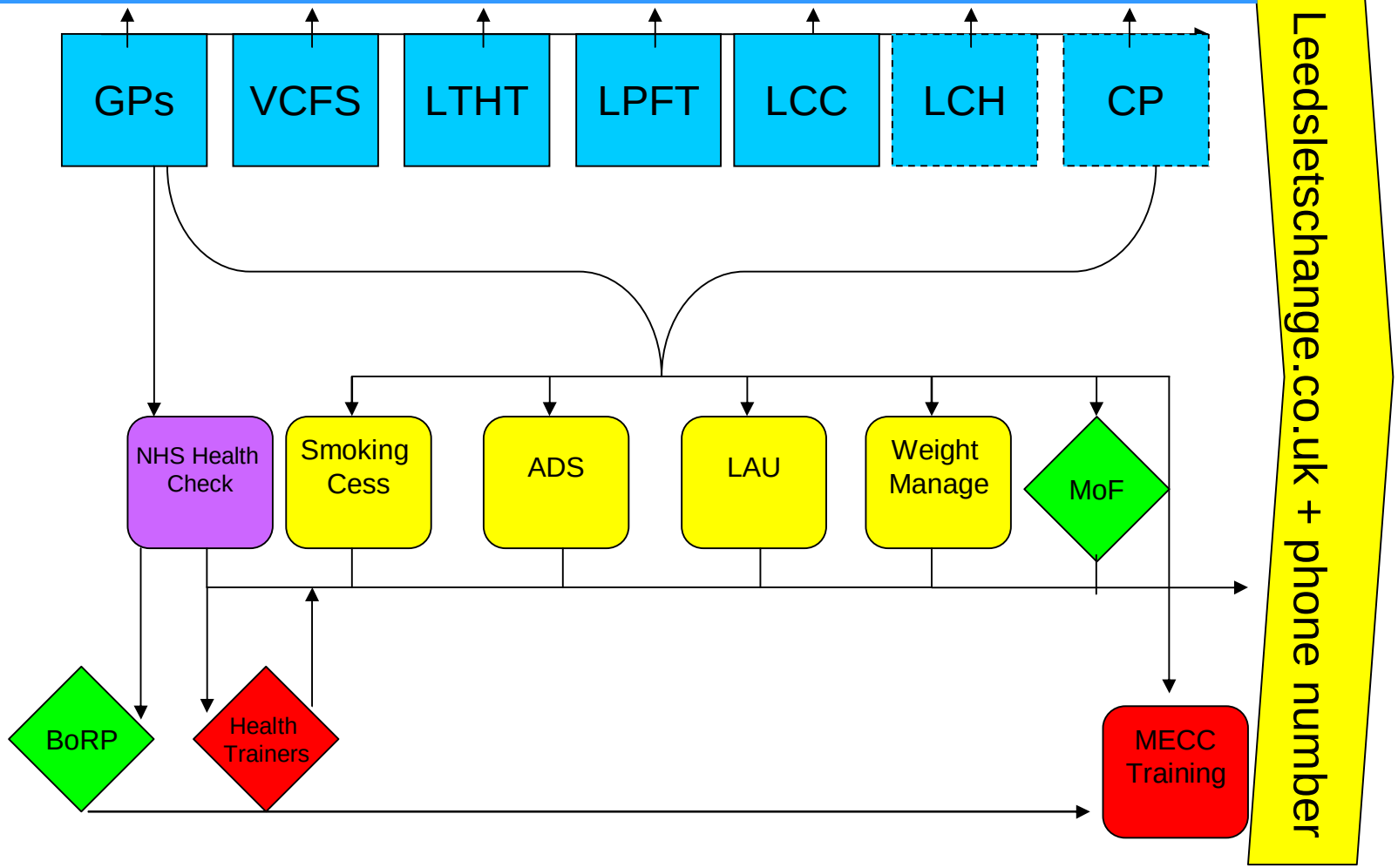

	Current Systematic Approach Settings		HLIP Initiatives
	Future Systematic Approach Setting		HLIP support services
	HLIP Specialist Services		HL identification programme

Making Every Contact Count

NHS Leeds

Leeds CITY COUNCIL

HEALTH IS EVERYONE'S BUSINESS

adapted from E. Hill & A. Huddleston NHS Stockport 2010

NHS
Yorkshire and the Humber

Key Contacts

- Karen Payne, *Public Health Workforce Lead*

  Karen.Payne@yorksandhumber.nhs.uk

- Candia Allen, *Health Improvement Principal – Workforce Development*

candia.allen@nhsleeds.nhs.uk

NHS
Leeds