STANLEY
99
N°

STANLEY

STANLEY

STANLEY

BLACK&
DECKER
BLACK&DECKER 12v

BLACK&
DECKER
6.0V

BLACK&
DECKER

W. E. MOULTON.
ATTACHMENT FOR DRILLS.
APPLICATION FILED APR. 14, 1919.

1,333,559.

Patented Mar. 9, 1920.

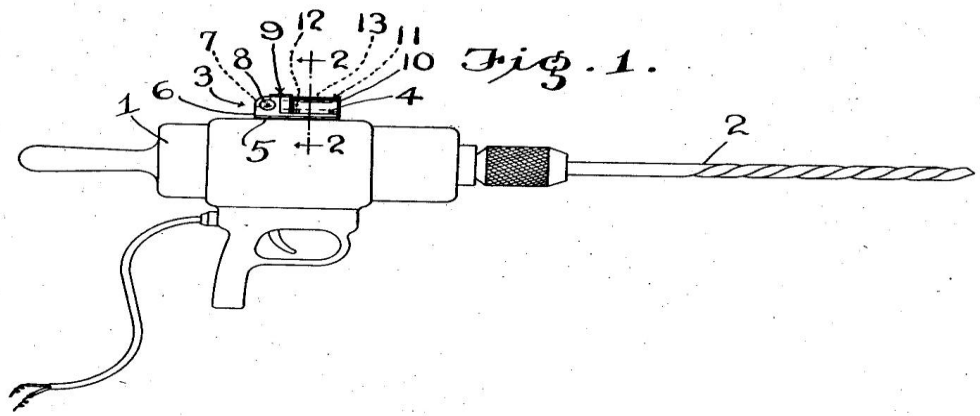

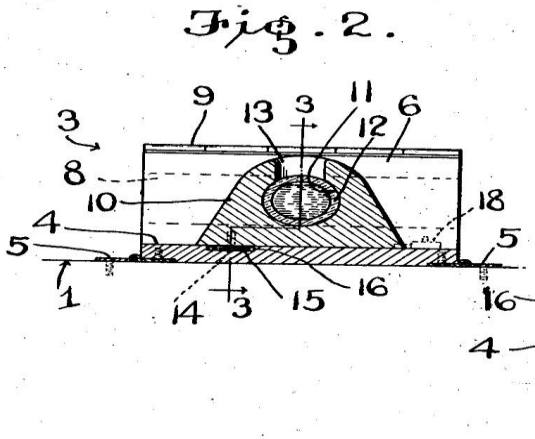

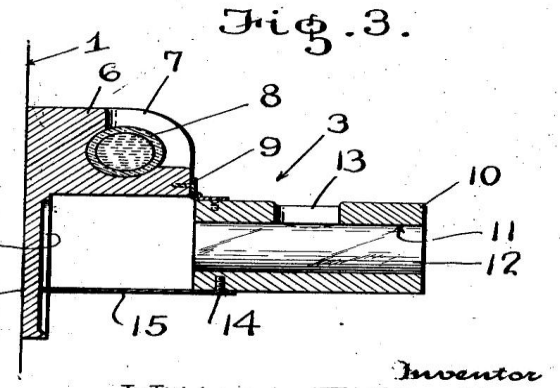

Witnesses
L. B. James

Inventor
William E. Moulton
By Victor J. Evans
Attorney

AeroScout
LISTA
EXPERT
STANLEY Security
GRIPCO
POP
BEST ACCESS SYSTEMS
MAC TOOLS
FACOM
eyeLock
HeliCoil
STANLEY Assembly Technologies
BLACK+DECKER
PORTER CABLE
GMT
infastech
STANLEY Healthcare
TUCKER
BOSTITCH
Powers FASTENING INNOVATIONS
COOPERHEAT
LaBounty
STANLEY
CRC-EVANS
PROTO
WARREN
Dodge
MASTERFIX
USAG
CribMaster
SIDCHROME
EMHART TEKNOLOGIES
STANLEY DUBUIS
NPR
Vidmar
DEWALT
SONITROL
PIH

Patents are business tools which must aid the bottom line

- Achieved by linking protection to the business strategies
- So need patent strategies, too
- Acquisition and exploitation of patents needs business direction

Business Aims for Patents:

KEEP OUT	ALLOW IN	WAR CHEST
Market share	License others	Trade in disputes
Product Exclusivity	Income and control	Competitor battles
	Sell	Cross-licences
	Income	Bookshelf/Blue Sky
	Standards	

Not looking to protect ….. but control

These are our goals. What are our tactics?

EDUCATION

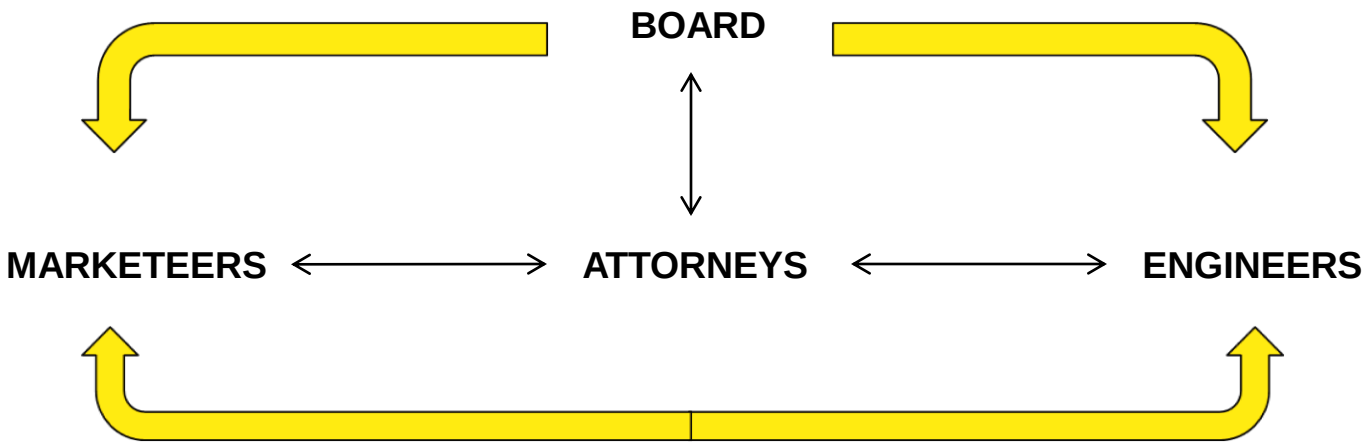

Board sets broad IP strategies

Attorneys are part of the business

Not just product development

Aim for broad IP knowledge across all business areas

INNOVATION

Must be structured and fall in line with business strategies

No formal submission procedure:-

- **Removes inventor inertia**
- **Encourages Attorneys to be integral part of the business**
- **Little is missed**
- **Avoids the need for incentive schemes**
- **No guarantee an employee submission is in line with the business strategies / IP strategies**

Innovation Sources

INTERNAL → STAFF "PUSH"

EXTERNAL → MARKET "PULL"

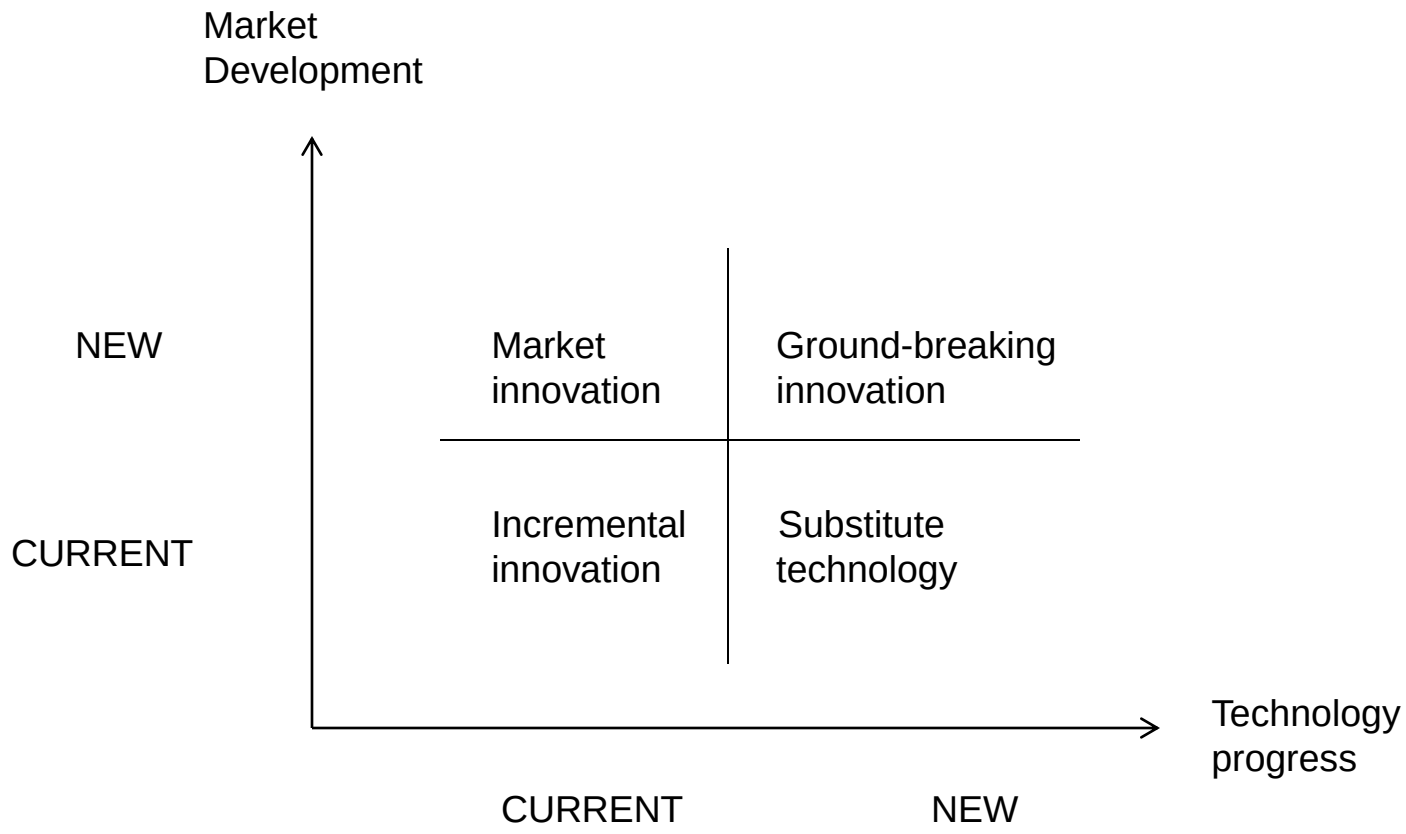

Structured Decisions / Idea Management

Triumvirate for Idea Assessment

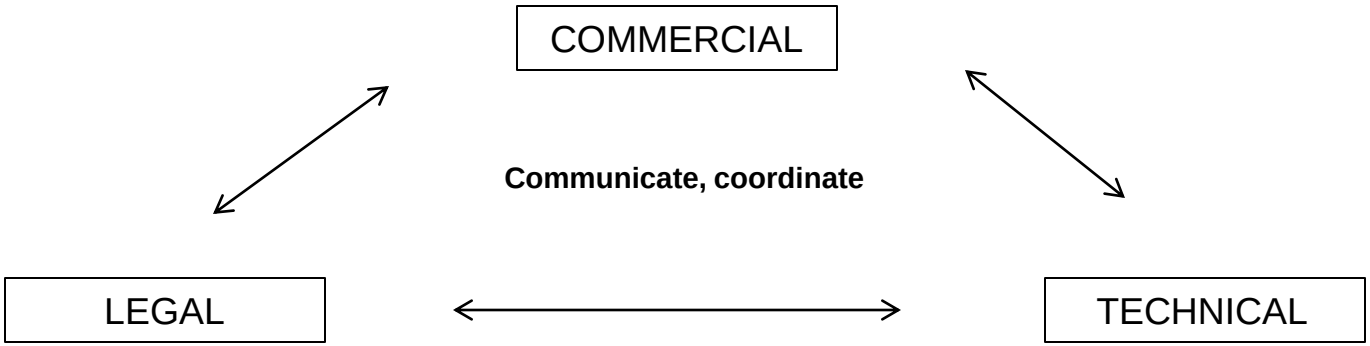

Rank ideas according to criteria set by patent strategy

Need a minimum return on the patent investment

Aiming for a portfolio constructed in accordance with the patent strategy

Portfolio valuation – outcome vs cost

Scope of Protection

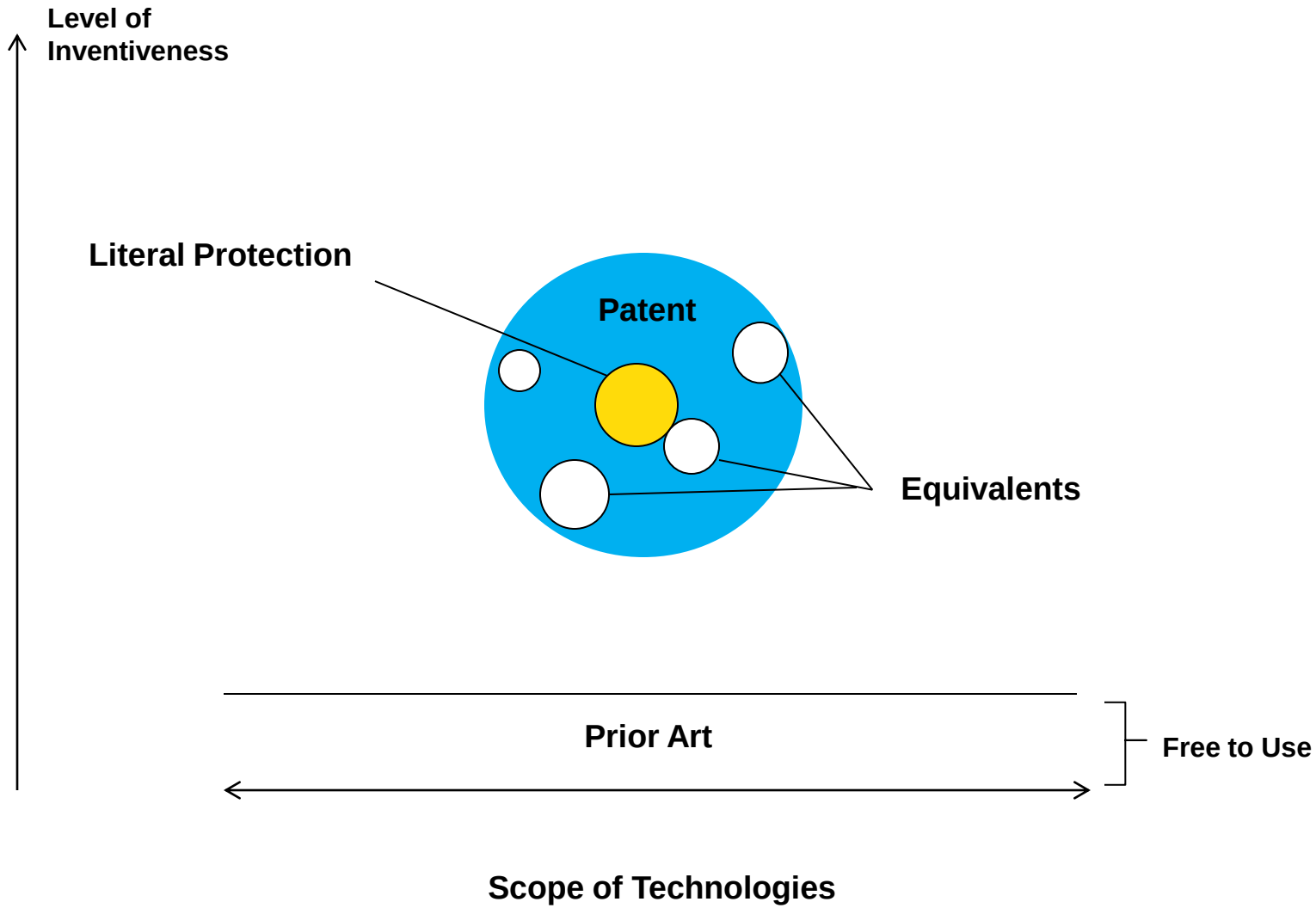

Improvements - Build a Wall from Little Bricks

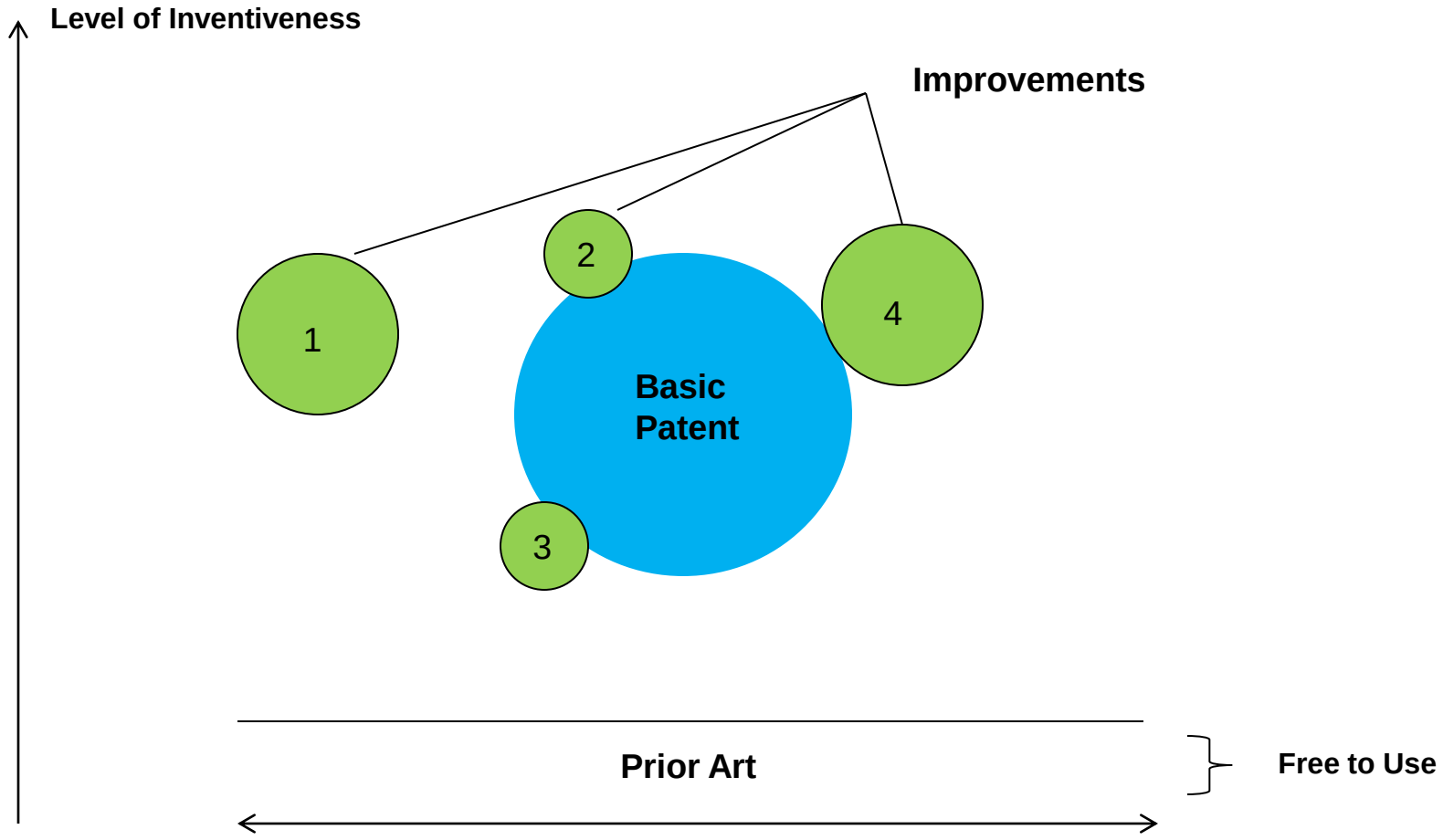

Bosch SDS fitment system

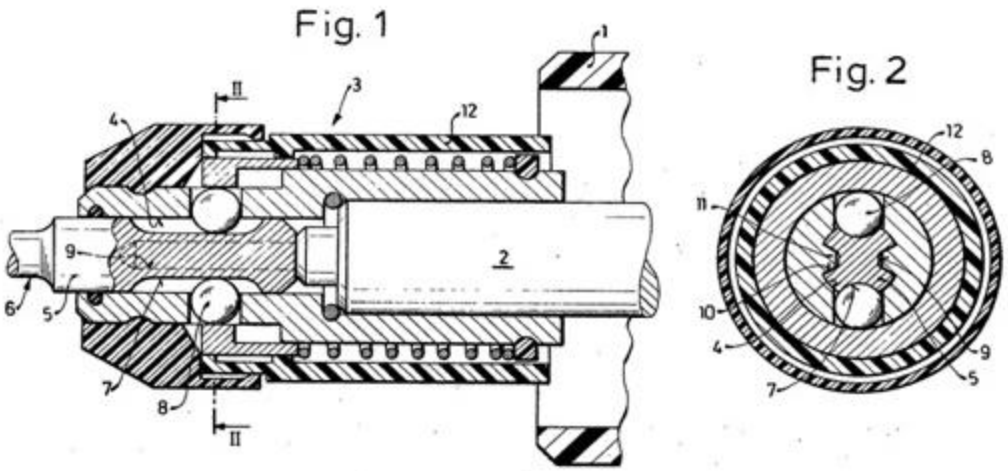

GB 1,536,738

Project lead by Patent Attorneys and Engineers

Strategy: to develop a protectable industry-wide drill bit fitment system

Licences available to all

Basics and Improvements

Note Search Report

PCT

WELTORGANISATION FÜR GEISTIGES EIGENTUM
Internationales Büro

INTERNATIONALE ANMELDUNG VERÖFFENTLICHT NACH DEM VERTRAG ÜBER DIE INTERNATIONALE ZUSAMMENARBEIT AUF DEM GEBIET DES PATENTWESENS (PCT)

(51) Internationale Patentklassifikation 5 : B25D 17/08, B23B 31/04, 51/00	A1	**(11) Internationale Veröffentlichungsnummer:** WO 90/00957 **(43) Internationales Veröffentlichungsdatum:** 8. Februar 1990 (08.02.90)

(21) Internationales Aktenzeichen: PCT/DE89/00480

(22) Internationales Anmeldedatum: 19. Juli 1989 (19.07.89)

(30) Prioritätsdaten:
P 38 24 894.8 22. Juli 1988 (22.07.88) DE

(71) Anmelder *(für alle Bestimmungsstaaten ausser US):* ROBERT BOSCH GMBH [DE/DE]; Postfach 10 60 50, D-7000 Stuttgart 10 (DE).

(72) Erfinder;und
(75) Erfinder/Anmelder *(nur für US)* : OBERMEIER, Josef [DE/DE]; Friedrich-List-Str. 117, D-8000 München 70 (DE). RUMPP, Gerhard [DE/DE]; Schornstr. 2, D-8084 Inning/Ammersee (DE).

(81) Bestimmungsstaaten: AT (europäisches Patent), BE (europäisches Patent), CH (europäisches Patent), DE (europäisches Patent), DK, FR (europäisches Patent), GB (europäisches Patent), IT (europäisches Patent), JP, KR, LU (europäisches Patent), NL (europäisches Patent), SE (europäisches Patent),

US.

Veröffentlicht
Mit internationalem Recherchenbericht.

(54) Title: A DEVICE ON MANUAL MACHINE TOOLS FOR TORQUE TRANSMISSION

(54) Bezeichnung: EINRICHTUNG AN HANDWERKZEUGMASCHINEN ZUR DREHMOMENTÜBERTRAGUNG

(57) Abstract

The device on manual machine tools is designed for transmitting torque to percussion drills in that locking components (7) with recesses (6a) axially closed on both sides and cotters (2b, 2c) co-operate with keyways (6c, 6d) distributed around the periphery on the tool spindle (6). To prevent incorrect use, the keyways (6c, 6d) are so arranged that it is impossible for two keyways (6c, 6d) to be diametrically opposite each other. In order to be able to make the keyways (6c, 6d) economically by forging, the sum of the cross-sections of the keyways (6c, 6d) is equal on both sides of longitudinal plane (X) running through the recesses (6a) so that the same volume of material has to be forged on both sides of this longitudinal plane (X) and the forces generated are thus uniformly distributed.

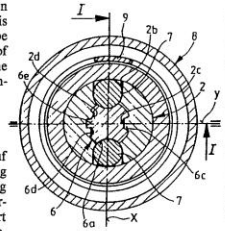

(57) Zusammenfassung

Die Einrichtung an Handwerkzeugmaschinen ist zur Drehmomentübertragung auf schlagbohrende Werkzeuge vorgesehen, indem Verriegelungskörper (7) mit axial beidseitig geschlossenen Ausnehmungen (6a) und Mitnahmeleisten (2b, 2c) mit über den Umfang verteilt angeordneten Drehmitnahmenuten (6c, 6d) am Werkzeugschaft (6) zusammenwirken. Zur Vermeidung einer Fehlanwendung sind die Drehmitnahmenuten (6c, 6d) derart angeordnet, dass in keinem Fall zwei Drehmitnahmenuten (6c, 6d) einander diametral gegenüberliegen. Um die Drehmitnahmenuten (6c, 6d) wirtschaftlich mittels eines spanlosen Umformverfahrens herstellen zu können, ist die Summe der Querschnitte der Drehmitnahmenuten (6c, 6d) auf beiden Seiten einer durch die Ausnehmungen (6a) verlaufenden Längsebene (X) gleich gross, so dass auf beiden Seiten dieser Längsebene (X) dasselbe Materialvolumen umgeformt werden muss und somit eine gleichmässige Aufteilung der dadurch entstehenden Kräfte erfolgt.

INTERNATIONAL SEARCH REPORT

International Application No PCT/DE 89/00480

I. CLASSIFICATION OF SUBJECT MATTER (if several classification symbols apply, indicate all) 6

According to International Patent Classification (IPC) or to both National Classification and IPC

Int. Cl. 5 B 25 D 17/08, B 23 B 31/04, B 23 B 51/00

II. FIELDS SEARCHED

Minimum Documentation Searched 7

Classification System	Classification Symbols
Int. Cl. 5	B 25 D, B 23 B, E 21 C

Documentation Searched other than Minimum Documentation to the Extent that such Documents are Included in the Fields Searched 8

III. DOCUMENTS CONSIDERED TO BE RELEVANT 9

Category *	Citation of Document, 11 with indication, where appropriate, of the relevant passages 12	Relevant to Claim No. 13
A	GB, A, 2096045 (BOSCH) 13 October 1982 --	
A	EP, A, 0071821 (DUROFAC KARTRO A/S) 16 February 1983 --	
A	FR, A, 2282323 (H. REINHOLDT A/S) 19 March 1976 --	
A	FR, A, 2331410 (BOSCH) 10 June 1977 --	
A	DE, A, 2405938 (IMPEX-ESSEN) 21 August 1975 --	
P,A	DE, A, 3716915 (BOSCH) 8 December 1988 cited in the application	

---

* Special categories of cited documents: 10

"A" document defining the general state of the art which is not considered to be of particular relevance

"E" earlier document but published on or after the international filing date

"L" document which may throw doubts on priority claim(s) or which is cited to establish the publication date of another citation or other special reason (as specified)

"O" document referring to an oral disclosure, use, exhibition or other means

"P" document published prior to the international filing date but later than the priority date claimed

"T" later document published after the international filing date or priority date and not in conflict with the application but cited to understand the principle or theory underlying the invention

"X" document of particular relevance; the claimed invention cannot be considered novel or cannot be considered to involve an inventive step

"Y" document of particular relevance; the claimed invention cannot be considered to involve an inventive step when the document is combined with one or more other such documents, such combination being obvious to a person skilled in the art.

"&" document member of the same patent family

IV. CERTIFICATION

Date of the Actual Completion of the International Search	Date of Mailing of this International Search Report
27 September 1989 (27.09.89)	26 October 1989 (26.10.89)
International Searching Authority	**Signature of Authorized Officer**
European Patent Office	

Form PCT/ISA/210 (second sheet) (January 1985)

Importance of Subsequent Developments

PATENT SPECIFICATION

DRAWINGS ATTACHED

Inventor: CHRISTOPHER SYDNEY COCKERELL

854211

Date of filing Complete Specification: Dec. 11, 1956.

Application Date: Dec. 12, 1955. *No. 35656/55.*

Complete Specification Published: Nov. 16, 1960.

Index at acceptance:—Class 4, FXX.

International Classification:—B64d.

BEST AVAILABLE COPY

COMPLETE SPECIFICATION

Improvements in or relating to Vehicles for Travelling Over Land and/or Water

We, HOVERCRAFT DEVELOPMENT LIMITED, a British Company of 7, Tilney Street, London, W.1, do hereby declare the invention, for which we pray that a patent may be granted to us, and the method by which it is to be performed, to be particularly described in and by the following statement:—

This invention relates to vehicles for travelling over land and/or water and may be applied to ships or aircraft or land-going vehicles or to vehicles which represent a combination thereof.

The invention in one respect consists in a vehicle which comprises means for causing a fluid to issue from the lower part of the vehicle in such a way as to result in the formation and maintenance of at least one curtain of moving fluid which travels across the gap that in operation exists between the surface over which the vehicle is to hover or travel and the structure of the vehicle and, together with the said structure and surface, encloses a space into which the said fluid, or a gas other than the said fluid, flows so as to result in the formation of a pressurised cushion or cushions by which the vehicle is wholly or partly supported, the pressure of the cushion causing, and in its turn being contained due to, a change of direction of the moving fluid which results in a curvature of the curtain, and in which the means for forming the curtain are such that in cruising conditions the thrust due to the stream of fluid finally leaving the vehicle is substantially less than the weight of the vehicle when loaded.

The invention in another aspect consists in a vehicle which comprises means for causing at least one stream of fluid to issue from the lower part of the vehicle to form at least one curtain of moving fluid which travels across the gap that in operation exists between the surface over which the vehicle is to hover or travel and the structure of the vehicle and, together with the said structure and surface, encloses a space into which the said fluid, or a gas other than the said fluid, flows so as to result in the formation of a pressurised cushion or cushions by which the vehicle is wholly or partly supported, the pressure of the cushion causing, and in its turn being contained due to, a change of direction of the moving fluid which results in a curvature of the curtain, the plan area enclosed by the said stream of fluid, the said surface and the structure of the vehicle being a number of times larger than the cross-sectional area of the stream of fluid, and in which the means for forming the curtain are such that in cruising conditions the thrust due to the stream of fluid finally leaving the vehicle is substantially less than the weight of the vehicle when loaded.

The invention in yet another aspect consists in a vehicle which comprises an intake for a fluid, means for drawing fluid through the intake and causing it to issue from the lower part of the vehicle in such a way as to result in the formation and maintenance of at least one curtain of moving fluid which travels across the gap that in operation exists between the surface over which the vehicle is to hover or travel and the structure of the vehicle and, together with the said structure and surface, encloses a space into which the said fluid, or a gas other than the said fluid, flows so as to result in the formation of a pressurised cushion or cushions by which the vehicle is wholly or partly supported, the pressure of the cushion causing, and in its turn being contained due to, a change of direction of the moving fluid which results in a curvature of the curtain, and in which the plan area of the said pressurised cushion or cushions is a number of times larger than the total cross-sectional area through which the fluid is taken in, and the means for

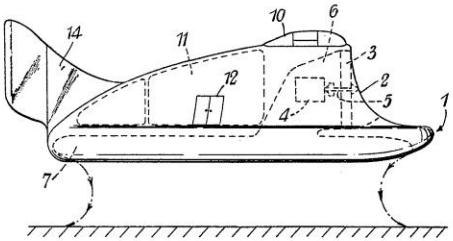

FIG.1.

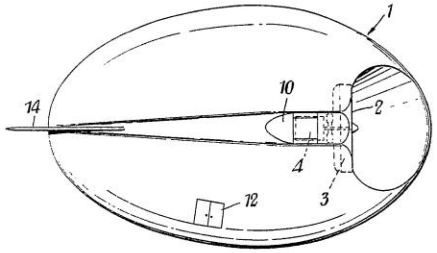

FIG.2.

But the Improvement:

935531 COMPLETE SPECIFICATION

1 SHEET *This drawing is a reproduction of the Original on a reduced scale*

FIG. 1

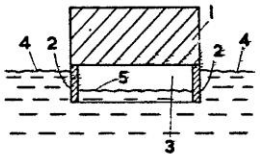

FIG. 2

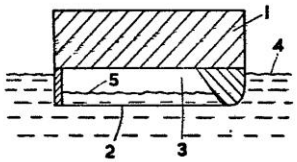

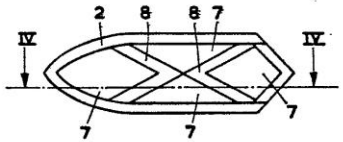

FIG. 3

FIG. 4

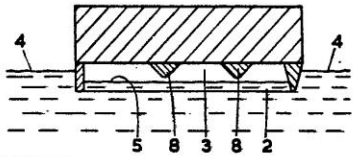

FIG. 5

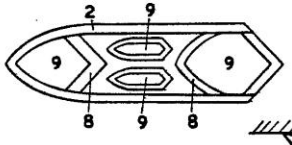
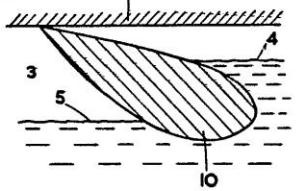
FIG. 6